ANALOGUE & AES INPUTS

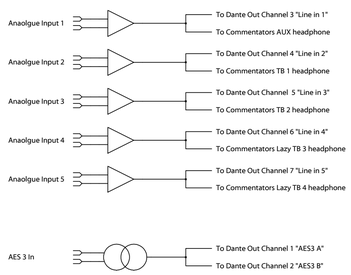

COMMENTATOR A HEADPHONES

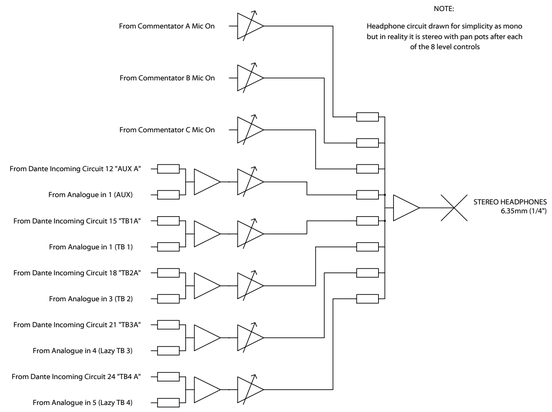

COMMENTATOR B HEADPHONES

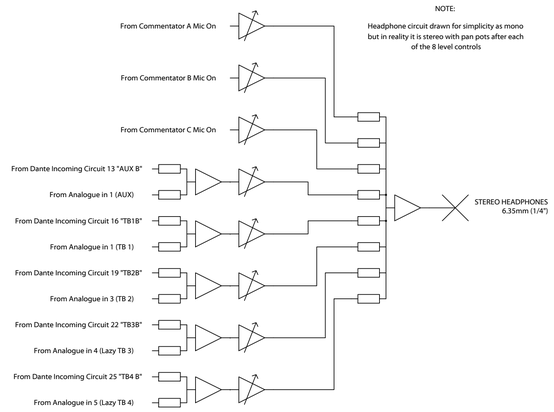

COMMENTATOR C HEADPHONES

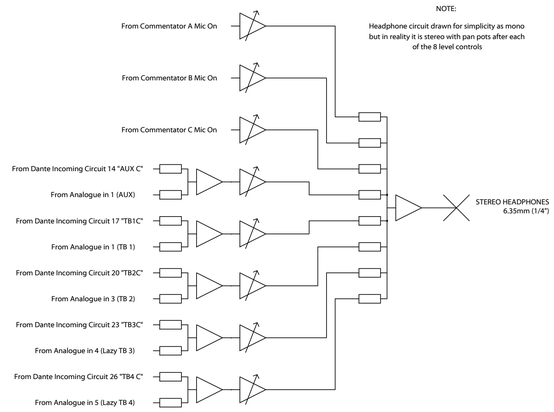

COMMENTATORS MIC CIRCUITS

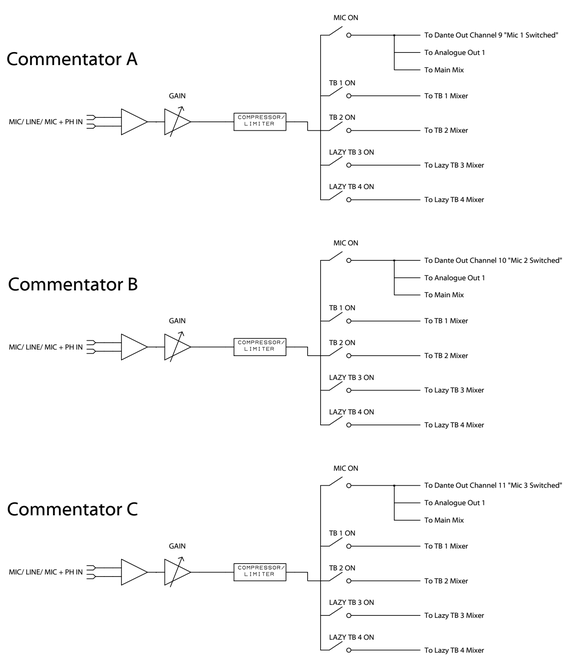

MAIN & TALKBACK MIXERS

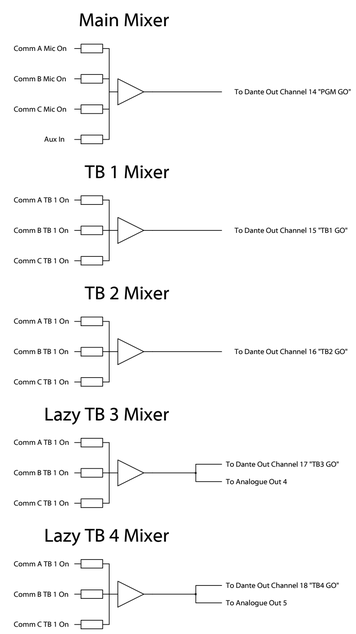

ANALOGUE & AES OUT

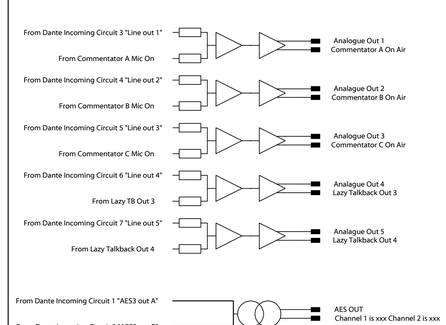

WXYZ Mixer

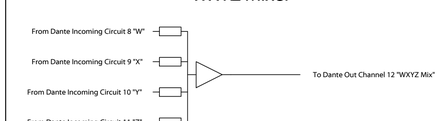

PARADISO DEFAULT CONFIGURATION	ISSUE 1	DATE FEB 2017	Glensound ©2017
	DRAWING NUMBER A1-18026		